# Data sheet Torsion spring : T-16811L

GUTEKUNST FEDERN

07.2025

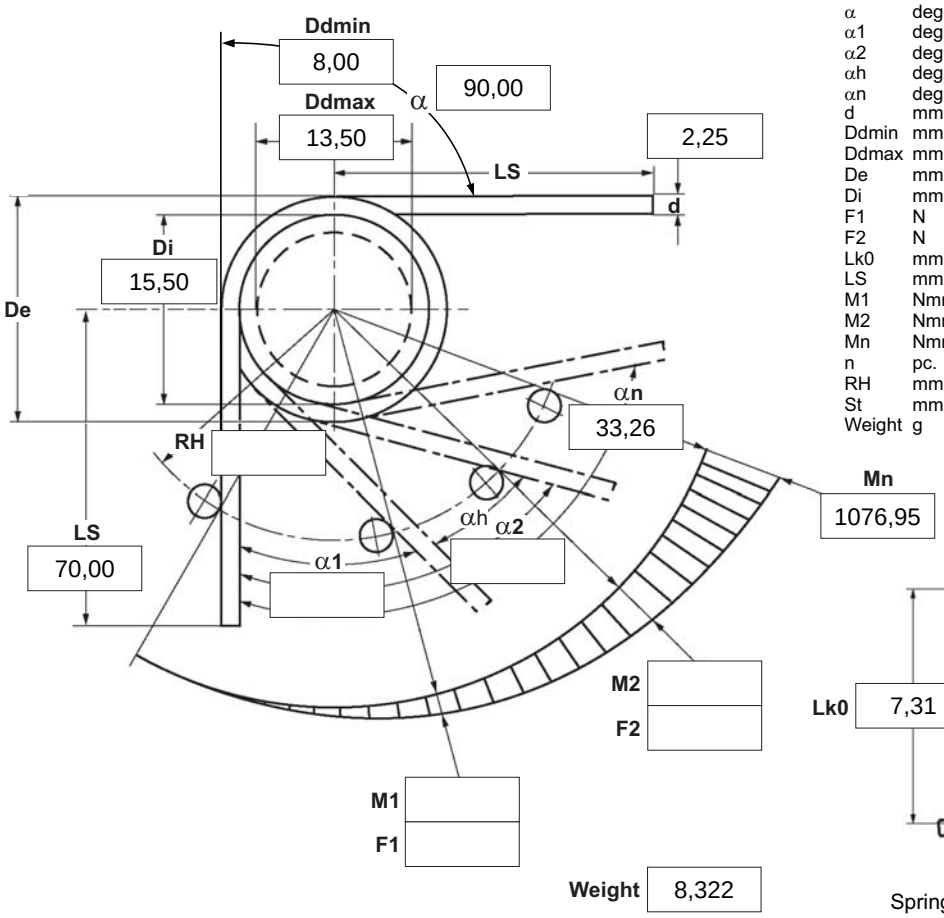


| | | |
|---|---|---|
| α | degree | Unstressed leg position |
| α1 | degree | Prestressed rotational angle |
| α2 | degree | Loaded rotational angle |
| αh | degree | Excursion |
| αn | degree | Maximum rotational angle |
| d | mm | Wire diameter |
| Ddmin | mm | Min. possible mandrel diameter |
| Ddmax | mm | Max. possible mandrel diameter |
| De | mm | Outer coil diameter |
| Di | mm | Inner coil diameter |
| F1 | N | Prestressed spring force |
| F2 | N | Loaded spring force |
| Lk0 | mm | Length of spring body when relaxed |
| LS | mm | Length of leg |
| M1 | Nmm | Prestressed torque |
| M2 | Nmm | Loaded torque |
| Mn | Nmm | Maximum torque |
| n | pc. | Aktive coils |
| RH | mm | Distance power flow point from centre |
| St | mm | Distance between coils (pitch) |
| Weight | g | Weight of one spring in grammes |

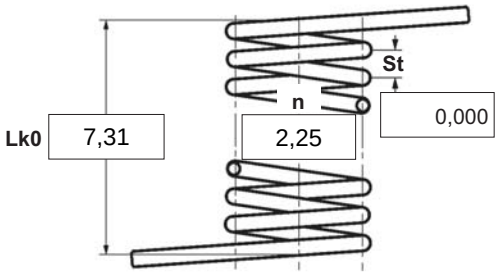


Spring test acc. to DIN ISO 2859/1 test level II

**1 Coiling direction**

☒ left ☐ right

**2 Form of legs**

tangential, straight, no bends *

*We can also supply torsion springs with any form of leg for an extra charge.

**3 Fixing**

| Recumbent leg | Lever leg |
|---|---|
| | |

**4 Load**

☐ in winding direction
☐ against winding direction

**5 Excursion αh** degr.

**6 Stress cyc. end. N**

**7 Stress cycle frequ. n** /

**8 Application temp.** °C

**9 Material**

1.4310

**10 Wire or rod surface**

☒ drawn ☐ rolled ☐ metal-cut

**11 Surface treatment**

**12 Tolerances to DIN 2194**

| Grade | Di | Lk0 | LSH,LSR | α,α1,α2 | M1,M2 | Wire diameter d to DIN 2076 |
|---|---|---|---|---|---|---|
| 1 | ☐ | ☐ | ☐ | ☐ | ☐ | |
| 2 | ☒ | ☒ | ☒ | ☒ | ☒ | |
| 3 | ☐ | ☐ | ☐ | ☐ | ☐ | ☒ |

**13 Production compensation through**

| | | |
|---|---|---|
| A spring torque and the associated swing angle | α | ☒ |
| A spring torque and the associated swing angle and α0 | n, d | ☐ |
| | n, Di | ☐ |
| Two spring resistances and the associated swing angle | α, n, d | ☐ |
| | α, n, Di | ☐ |

**Remarks**

País de origen: DE | Número de arancel aduanero: 73202089

**Prices**

| Cantidad progresiva | Precio unidad [EUR] |
|---|---|
| 1 | 5,4200 € |
| 2 | 3,8200 € |
| 3 | 3,6400 € |
| 7 | 2,6600 € |
| 17 | 1,3800 € |
| 37 | 1,0200 € |
| 75 | 0,8900 € |
| 125 | 0,5823 € |
| 175 | 0,5445 € |
| 250 | 0,4945 € |
| 350 | 0,4610 € |
| 450 | 0,4169 € |


**Gutekunst + Co.KG Spring Factories · Carl-Zeiss-Straße 15 · D-72555 Metzingen**
Sales +49 7123 960-192 · Customize springs +49 7123 960-193 · Main +49 7123 960-0
Fax +49 7123 960-195 · E-mail: order@gutekunst-co.com